960W Three Phase Industrial DIN RAIL Power Supply DRT-960 series

■ Features :

- Three-Phase AC 340 ~ 550V wide range input
- High efficiency 91% and low dissipation
- Protections:Short circuit/Over load/Over voltage/Over temperature
- Optional parallel function(1+1)
- Cooling by free air convection
- Can be installed on DIN rail TS-35/7.5 or 15
- UL 508(industrial control equipment)approved
- EN61000-6-2(EN50082-2) industrial immunity level
- 100% full load burn-in test
- 3 years warranty

SPECIFICATION

MODEL		DRT-960-24	DRT-960-48
OUTPUT	DC VOLTAGE	24V	48V
	RATED CURRENT	40A	20A
	CURRENT RANGE	0 ~ 40A	0 ~ 20A
	RATED POWER	960W	960W
	RIPPLE & NOISE (max.) Note.2	80mVp-p	80mVp-p
	VOLTAGE ADJ. RANGE	24 ~ 28V	48 ~ 55V
	VOLTAGE TOLERANCE Note.3	±1.0%	±1.0%
	LINE REGULATION	±0.5%	±0.5%
	LOAD REGULATION	±0.5%	±0.5%
	SETUP, RISE TIME	200ms, 60ms/400VAC 200ms, 60ms/500VAC at full load	
	HOLD TIME (Typ.)	14ms/400VAC 30ms/500VAC at full load	
INPUT	VOLTAGE RANGE	Three-Phase 340 ~ 550VAC	
	FREQUENCY RANGE	47 ~ 63Hz	
	EFFICIENCY (Typ.)	91%	92%
	AC CURRENT (Typ.)	2A/400VAC 1.6A/500VAC	
	INRUSH CURRENT (max.)	COLD START 50A	
	LEAKAGE CURRENT	<3.5mA / 530VAC	
PROTECTION	OVER LOAD	105 ~ 125% rated output power	
		Protection type : Constant current limiting, unit will shut down o/p voltage after 3 sec. , re-power on to recover	
	OVER VOLTAGE	30 ~ 36V	59 ~ 66V
		Protection type : Shut down o/p voltage, re-power on to recover	
	OVER TEMPERATURE	110℃±5℃ (TSW1) Detect on heatsink of power transistor 85℃±5℃ (TSW2) Detect on heatsink of power diode	
		Protection type : Shut down o/p voltage, recovers automatically after temperature goes down	
ENVIRONMENT	WORKING TEMP.	-20 ~ +60℃ (Refer to output load derating curve)	
	WORKING HUMIDITY	20 ~ 90% RH non-condensing	
	STORAGE TEMP., HUMIDITY	-40 ~ +85℃, 10 ~ 95% RH	
	TEMP. COEFFICIENT	±0.03%/℃ (0 ~ 50℃)	
	VIBRATION	Component:10 ~ 500Hz, 2G 10min./1cycle, 60min. each along X, Y, Z axes; Mounting: Compliance to IEC60068-2-6	
SAFETY & EMC (Note 4)	SAFETY STANDARDS	UL508, UL60950-1, TUV EN60950-1 Approved	
	WITHSTAND VOLTAGE	I/P-O/P:3KVAC I/P-FG:1.5KVAC O/P-FG:0.5KVAC	
	ISOLATION RESISTANCE	I/P-O/P, I/P-FG, O/P-FG:100M Ohms/500VDC	
	EMI CONDUCTION & RADIATION	Compliance to EN55011 (CISPR11), EN55022 (CISPR22), EN61204-3 Class B	
	HARMONIC CURRENT	Compliance to EN61000-3-2,-3	
	EMS IMMUNITY	Compliance to EN61000-4-2,3,4,5,6,8,11, ENV50204, EN61204-3, EN61000-6-2 (EN50082-2) Heavy industry level, criteria A	
OTHERS	MTBF	122.5Khrs min. MIL-HDBK-217F (25℃)	
	DIMENSION	276*125.2*100mm (W*H*D)	
	PACKING	3.3Kg; 4pcs/14.2Kg/1.14CUFT	
NOTE	1. All parameters NOT specially mentioned are measured at 400VAC input, rated load and 25℃ of ambient temperature. 2. Ripple & noise are measured at 20MHz of bandwidth by using a 12" twisted pair-wire terminated with a 0.1uf & 47uf parallel capacitor. 3. Tolerance : includes set up tolerance, line regulation and load regulation. 4. The power supply is considered a component which will be installed into a final equipment. The final equipment must be re-confirmed that it still meets EMC directives.		

■ Mechanical Specification

Case No.934 Unit:mm

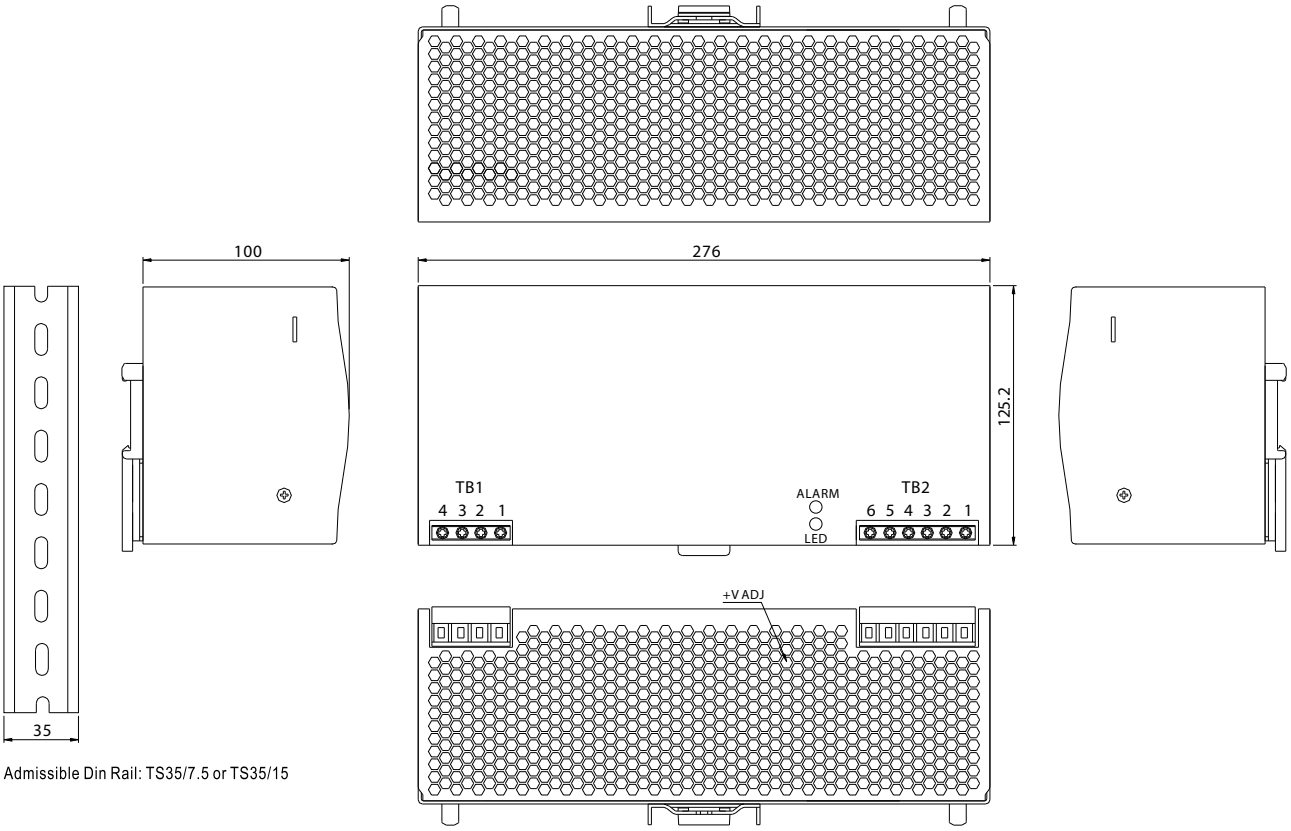

Admissible Din Rail: TS35/7.5 or TS35/15

TB1 Terminal Pin. No Assignment

Pin No.	Assignment
1	AC/L1
2	AC/L2
3	AC/L3
4	FG ⏚

TB2 Terminal Pin. No Assignment

Pin No.	Assignment
1,2,3	DC OUTPUT +V
4,5,6	DC OUTPUT -V

■ Derating Curve

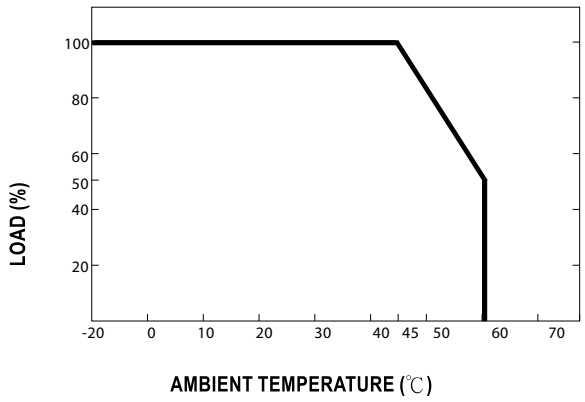

■ Static Characteristics

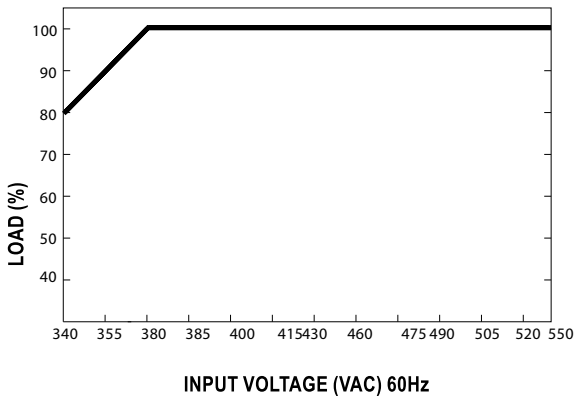

■ Parallel Function (1+1)-Optional (Special order required)

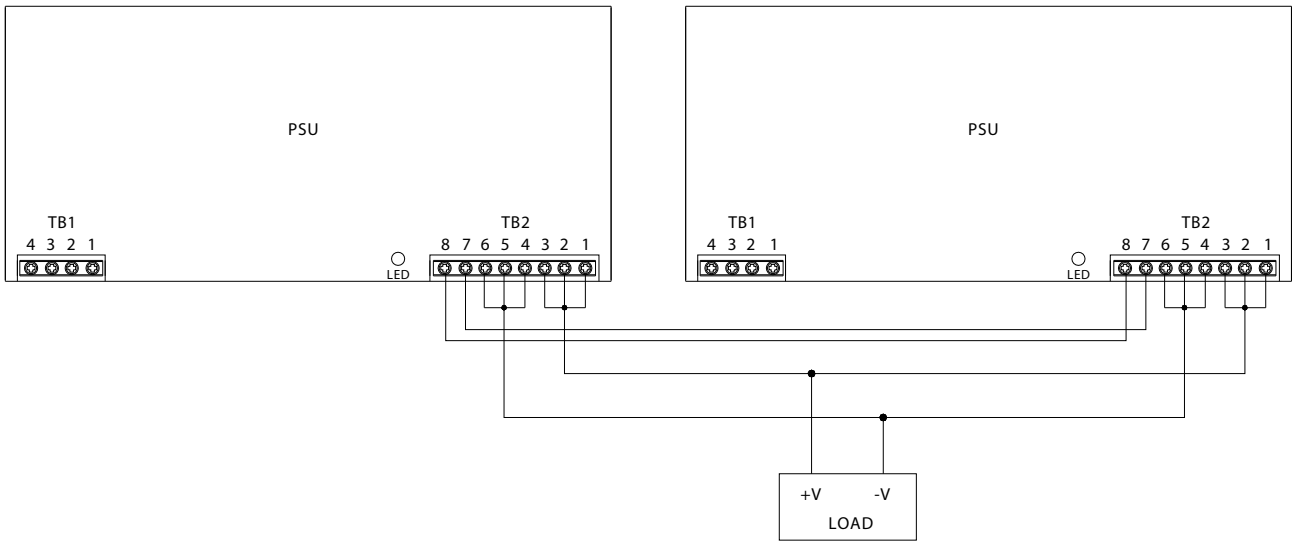

TB1 Terminal Pin. No Assignment

Pin No.	Assignment
1	AC/L1
2	AC/L2
3	AC/L3
4	FG ⏚

TB2 Terminal Pin. No Assignment

Pin No.	Assignment
1,2,3	DC OUTPUT +V
4,5,6	DC OUTPUT -V
7	GND
8	P(Current Share)

Note: Under parallel operation, if the load current is too small, only one PSU(master) would provide the power and hence the LED indicator of other PSUs may not light up.